AIAA PAPER
75-32

THE USE OF A NAVIGATION PLATFORM FOR PERFORMANCE INSTRUMENTATION ON THE YF-16 FLIGHT TEST PROGRAM

by
J. N. OLHAUSEN
General Dynamics, Fort Worth Division
Fort Worth, Texas

AIA. PAPER 75-32

AIAA 13th Aerospace Sciences Meeting

PASADENA, CALIF./JANUARY 20-22, 1975

For permission to copy or republish, contact the American Institute of Aeronautics and Astronautics, 1290 Avenue of the Americas, New York, N.Y. 10019.

M75-10416

THE USE OF A NAVIGATION PLATFORM FOR PERFORMANCE INSTRUMENTATION ON THE YF-16 FLIGHT TEST PROGRAM

J. N. Olhausen
General Dynamics
Fort Worth Division
Fort Worth, Texas

Abstract

An instrumentation package that makes use of an inertial navigation platform to obtain aerodynamic and performance flight test data has been developed. This package is being used quite successfully to obtain timely and accurate data during the General Dynamics YF-16 flight test program. This paper discusses the theoretical basis and practical aspects of using this instrumentation inertial reference set (IIRS) along with selected results obtained to date. Specific topics addressed include use of the IIRS to obtain flight path acceleration, α, β, normal load factor, rate of climb, airspeed, take-off and landing velocities and distances, position error calibration through the Mach jump region, and wind information. This system has proved to be invaluable on the YF-16 program and has demonstrated many benefits over previously used performance instrumentation.

I. Introduction

In aircraft performance flight testing, the engineer is always constrained in his selection of the onboard instrumentation systems by the need to get the maximum information in a minimum of flight time while insuring that the data derived is accurate enough for his needs. All of this must be done within the framework of allowable instrumentation, maintenance, and data reduction costs. In most cases, these constraints result in an instrumentation system tailored to the particular aircraft or type of testing being done. The system usually does not quite do the desired task, yet costs more than what management or the customer would like.

The adaption of an inertial navigation platform to the task of gathering flight test information has been discussed for many years but has not, with limited exceptions, been implemented due to a combination of factors. These include: high initial cost, marginal long-term accuracy in unaided modes of operation, questionable day-to-day reliability in a flight test environment, and the fact that other instrumentation, such as the flight path accelerometer, could yield most of the desired information with acceptable accuracy for most aircraft for a much lower total cost.

A combination of recent developments has made the inertial platform more attractive for flight test use. First, the cost/accuracy ratio of these systems has begun to decrease dramatically with the introduction of new high accuracy platforms. Secondly, over the same period of time, the mean time between failures of some of these systems has passed the thousand hour mark. Finally, flight testing of the new generation of high performance air-to-air combat aircraft is making demands that the instrumentation system yield more information than was required in the past. In addition, it must be able to accurately determine performance data over a large Mach, altitude, and load factor envelope under highly dynamic conditions. These data will be vitally important in determining the performance of the aircraft in the air-to-air role.

This paper makes some comments on the theoretical and practical aspects of using inertial navigation platforms as instrumentation inertial reference sets (IIRS) for performance flight testing, with emphasis on their use in the General Dynamics YF-16 Lightweight Fighter Prototype flight test program.

II. IIRS Advantages

The IIRS has several basic advantages over other types of flight test instrumentation used for performance work. Most of these advantages are of particular interest when it is necessary to obtain accurate data during highly dynamic maneuvers or when the aircraft is following an arbitrary flight path.

The IIRS is a self-contained system which supplies all data needed to define the motion of an aircraft in three-dimensional space. Therefore, it serves as a unified data source for the majority of information needed to define the performance capabilities of an aircraft. This feature of the IIRS can greatly reduce time correlation problems that develop when four or five separate instruments are required to determine aircraft orientation, angular rates, accelerations, and velocities. In addition, the IIRS is not subject to inertial, aerodynamic, or pneumatic lags and is insensitive to moderate and high frequency vibration. Since the unit is mounted internally in the aircraft and is in a temperature-controlled environment, it is not subjected to weather, rough handling, temperature variations, etc.

A modified Delco Carousel V inertial platform was chosen for use as the YF-16 IIRS. This unit has a demonstrated mean time between failures of over a thousand hours, an average navigation accuracy of less than one nautical mile per hour, and an extensive self-test/fault isolation capability. All these features have contributed greatly to the over-all success of the YF-16 test program and the demonstrated ability to run two or three data flights per day on each of two aircraft on a routine basis.

III. IIRS Mechanization

The following discussion gives an outline of how the Delco platform is mechanized. Other navigation units will differ in specific characteristics but the general method of operation of all gimbaled navigation platforms is the same.

The IIRS accurately measures accelerations, velocities, and orientation angles regardless of airframe orientation or angular rates. These accelerations and velocities are measured along three

Copyright © American Institute of Aeronautics and Astronautics, Inc., 1975. All rights reserved.

orthogonal axes and are output in a serial-digital format to the instrumentation recorder five times per second throughout the flight.

The IIRS establishes and maintains its platform orthogonal reference axes along true North, East, and down. This is the reference system in which it measures accelerations. The platform is supported by a four-gimbal, all-attitude structure which keeps it oriented in the North, East, and down frame regardless of aircraft orientation. Pick-offs on the gimbals give the angular position of the aircraft with respect to the reference axes. Gyroscopes (gyros) are mounted on the platform and instantaneously sense angular motion of the airframe. The gyro sensing signals are used to drive motors in the gimbal structure to keep the platform level.

As the aircraft travels over the Earth, the IIRS computer must make corrections to the platform to keep it level with the local plumb-bob vertical and to correct out sensed accelerations due to the centrifugal forces developed as the aircraft follows the curve of the Earth. The corrected accelerations along each axis are integrated to obtain inertial velocities in the North, East, and down directions. These velocities are then integrated to obtain distances traveled along each reference axis. The basic navigation parameters of latitude and longitude are computed by taking the starting location of the aircraft and adding the distances traveled over the Earth to it. A schematic representation of the IIRS is shown in Figure 1.

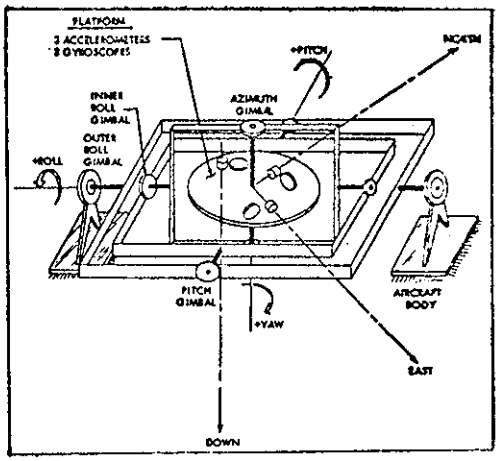

Figure 1. Schematic of IIRS Platform

It is evident that the accelerometers used in an acceptable platform must be very accurate to maintain good velocity and position information over several hours of flight time without recourse to outside references or updates. This requirement for accuracy insures that good acceleration data will be obtained for performance work.

The YF-16 IIRS accepts true airspeed and pressure altitude inputs from the aircraft Central Air Data Computer (CADC). The CADC data are derived from nose probe static and total pressure sources. The IIRS North and East Earth-referenced velocities are vectorially added and the result is subtracted from the true airspeed vector to compute horizontal wind speed and direction with respect to true North. These parameters, as well as true airspeed, are output from the IIRS along with the inertial accelerations, velocities, angles, etc.

The CADC pressure altitude is used in the IIRS to damp the IIRS Earth-referenced vertical velocity and altitude on a long-term basis. This damping is necessary due to local variations in the Earth's gravitational field but it has essentially no effect on sensed vertical acceleration nor does it affect the validity of sensed short term rates of climb during most types of testing.

The YF-16 IIRS has an extensive self-check system which monitors the platform instruments and the performance of the computer. These checks are performed many times a second and the results are formed into a status word which is output along with the other IIRS computed parameters. This word can be monitored on the ground real-time via telemetry to insure that the IIRS is functioning properly. A partial list of the YF-16 IIRS outputs is shown in Figure 2.

PARAMETER	RANGE	ACCURACY
Baro-Inertial Altitude	-1060 to 80338 feet	*
True Airspeed	425 to 2500 feet/second	*
Ground Speed	± 4096 feet/second	± 2.8 feet/second
Latitude	± 90 degrees	.0055 **
Longitude	±180 degrees	.0055 **
Wind Direction	±180 degrees	*
Wind Speed	0 to 500 feet/second	*
Track Angle	± 180 degrees	.0055 **
Drift Angle	±180 degrees	.0055 **
North Velocity	± 2500 feet/second	2.0 feet/second
East Velocity	± 2500 feet/second	2.0 feet/second
Down Velocity	± 2500 feet/second	2.0 feet/second
North Acceleration	± 9.0 g's	.002 g's
East Acceleration	± 9.0 g's	.002 g's
Down Acceleration	± 9.0 g's	.002 g's
True Heading	± 180 degrees	0.1 degrees
Pitch	± 180 degrees	0.1 degrees
Roll	± 180 degrees	0.1 degrees
Status Word	----------	----

* Dependent on CADC accuracy
** Output resolution

Figure 2. IIRS Outputs

IV. Data Reduction

The YF-16 data reduction procedures are designed to convert the IIRS information in the North, East, and down reference frame into performance parameters along and normal to the instantaneous flight path of the aircraft. This conversion is done in seven distinct steps that are discussed in detail in the following sections.

Data Synchronization

In a highly maneuvering aircraft, time correlation within milliseconds is necessary to achieve the desired performance data accuracies. Therefore, synchronization of IIRS acceleration, velocity, and angular outputs is required because all these parameters are not updated in the IIRS computer at the same instant of time. Since the accelerations are the most critical from an accuracy standpoint, the velocities and angles are adjusted in the data reduction procedure to represent their respective values at the exact time that the accelerations were updated in the IIRS computer. This is done, for each parameter, by using a fifth-order curve fit routine to represent the variation of that parameter with time and picking off the curve function value at the desired correlation time. This correction procedure has essentially no effect on velocity accuracy but can, under certain circumstances, adversely affect the accuracy of computed angular values. This is discussed in more detail

in Section V of this paper.

Fuselage Bending Correction

The IIRS is located in the forward avionics bay of the YF-16 and thus experiences slightly different motions than are sensed at the aircraft center-of-gravity (c.g.) during maneuvering flight. Part of this difference is due to forward fuselage bending as a result of aerodynamic and inertial forces. This deflection can be determined by analysis of the aircraft structural characteristics and pressure model tests in the wind tunnel at various Mach, altitude, and angle of attack conditions. Once the bending angle has been determined, it can be used to convert platform angles to true angles of the body axes at the c.g. with respect to the North, East, and down reference frame. The only deflection the YF-16 normally experiences is in the pitch axis and thus the equations shown below represent the complete orientation angle correction applied during steady or maneuvering flight. A diagram of the forward fuselage deflection is shown in Figure 3.

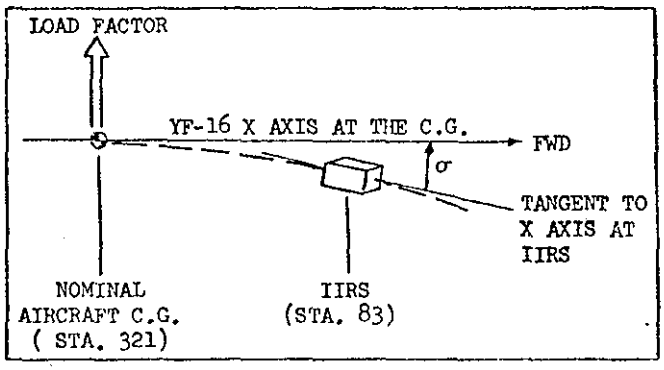

Figure 3

$$\sigma = f\,(\text{Mach, load factor, dynamic pressure, angle of attack, and fuel weight}) \quad (1)$$

$$\psi = \theta_Y + \sigma \sin \theta_R \quad (2)$$

$$\theta = \theta_P + \sigma \cos \theta_R \quad (3)$$

$$\phi = \theta_R \quad (4)$$

where:

σ = forward fuselage bending angle

θ_P = platform pitch angle

θ_R = platform roll angle

θ_Y = platform yaw angle

ψ, θ, ϕ = true angles of the aircraft body axes at the c.g. with respect to the reference North, East, and down.

Center of Gravity Correction

In order to correct out IIRS sensed accelerations and velocities induced by aircraft rotation, it is necessary to know the location of the IIRS platform relative to the aircraft c.g. in three axes and the rotation rate and angular accelerations the IIRS is experiencing. Since the c.g. travel with fuel consumption of the YF-16 is fairly small, the location of the IIRS relative to it is relatively constant.

The body axes angular rates and accelerations can be determined by differentiating the corrected platform angles to obtain angular rates, transforming these to body axes angular rates, and differentiating them with respect to time to obtain angular accelerations. This is done using a moving twenty point curve fitting procedure to track the angles as a function of time and then differentiating the curve-fitted lines to obtain angular rates and accelerations time-synchronized with the IIRS linear acceleration outputs. Once this information has been obtained, it is a matter of determining what accelerations and velocities the angular motion of the aircraft would produce at the IIRS location and subtracting these components from the IIRS outputs. A schematic of the IIRS location relative to the c.g. is shown in Figure 4 and the transformation equations are presented in equations (5) through (19).

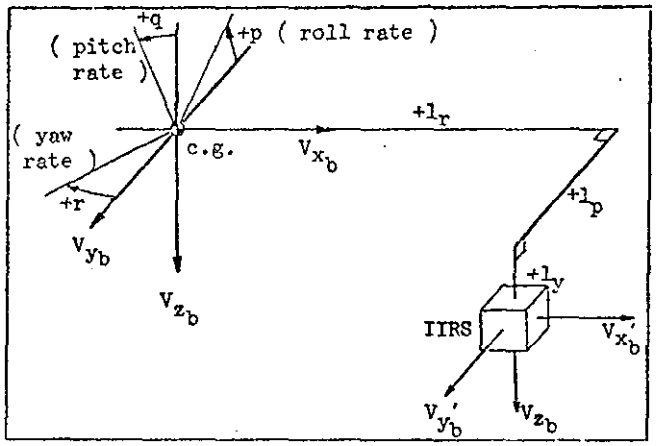

Figure 4

$$\dot{\psi} = \frac{d\psi}{dt} \quad (5)$$

$$\dot{\theta} = \frac{d\theta}{dt} \quad (6)$$

$$\dot{\phi} = \frac{d\phi}{dt} \quad (7)$$

$$p = \dot{\phi} - \dot{\psi} \sin \theta \quad (8)$$

$$q = \dot{\theta} \cos \phi + \dot{\psi} \cos \theta \sin \phi \quad (9)$$

$$r = \dot{\psi} \cos \theta \cos \phi - \dot{\theta} \sin \phi \quad (10)$$

$$\dot{p} = \frac{dp}{dt} \quad (11)$$

$$\dot{q} = \frac{dq}{dt} \quad (12)$$

$$\dot{r} = \frac{dr}{dt} \quad (13)$$

$$\Delta v_x = -q\, l_y + r\, l_p \tag{14}$$

$$\Delta v_y = -r\, l_r + p\, l_y \tag{15}$$

$$\Delta v_z = -p\, l_p + q\, l_r \tag{16}$$

$$\Delta a_x = \dot{r}\, l_p - \dot{q}\, l_y + l_r\,(q^2 + r^2) - p\,(q\, l_p + r\, l_y) \tag{17}$$

$$\Delta a_y = \dot{p}\, l_y - \dot{r}\, l_r + l_p\,(p^2 + r^2) - q\,(r\, l_y + p\, l_r) \tag{18}$$

$$\Delta a_z = \dot{q}\, l_r - \dot{p}\, l_p + l_y\,(p^2 + q^2) - r\,(p\, l_r + q\, l_p) \tag{19}$$

where:

$p,\ q,\ r$ = true angular rates of the aircraft about its own body axes (See Figure 4)

$l_r,\ l_p,\ l_y$ = distances from the c.g. of the aircraft to the IIRS in a body axes coordinate system (See Figure 4)

Δv_x, Δv_y, and Δv_z = increments in sensed body axes velocities at the IIRS due to aircraft rotation

Δa_x, Δa_y, and Δa_z = increments in sensed body axes accelerations at the IIRS due to aircraft rotation

These increments in body axes velocities and accelerations are subtracted from the corrected IIRS motion data once the IIRS outputs have been transformed to body axes, as discussed in the next sub-section.

The results of the previous analyses are accelerations, velocities, and angles with respect to the IIRS reference axes system and represent the motion and orientation of the aircraft c.g. as compared to the Earth reference system. The previous two data reduction sections have been required to correct the effect of having the IIRS away from the nominal c.g. of the aircraft. This displacement was necessary due to lack of space for IIRS at the c.g. Obviously the ability to locate the IIRS at the c.g. would greatly reduce the data reduction complexity and eliminate a potential source of error.

Transformation to Body Axes

The transformation of the IIRS Earth-referenced data to body axes data usable for performance work is done in two steps. The first is to convert Earth inertial velocities to velocities relative to the airmass. This is done by vectorially subtracting the North and East components of wind from the North and East inertial speeds as shown in equations (20) and (21). The wind speed is determined in a straight and level flight and is added to the inertial velocities during maneuvering flight to decouple the performance determination from the need to have a continuous output of pitot-statically derived true airspeed. This is necessary to prevent pneumatic line lags from degrading the overall picture of aircraft capabilities in very highly dynamic flight. It is assumed that the wind lies entirely in the horizontal plane.

$$V_x = V_{x_I} + V_w \cos \psi_w \tag{20}$$

$$V_y = V_{y_I} + V_w \sin \psi_w \tag{21}$$

where:

V_{x_I}, V_{y_I} = horizontal inertial velocity components in the Earth reference frame

V_w = wind speed

ψ_w = direction from which wind is coming with respect to true North

V_x, V_y = horizontal airmass velocity components in the Earth reference frame

The transformation of velocities and accelerations to aircraft body axes is done once the wind correction has been made. The transform matrix is shown in Figure 5. The increments calculated in equations (14) through (19) can now be used to correct the sensed body axes motion for aircraft rotation, as shown in equations (23) through (28).

$$V_{x_b} = V_{x_b}' + \Delta v_x \tag{23}$$

$$V_{y_b} = V_{y_b}' + \Delta v_y \tag{24}$$

$$V_{z_b} = V_{z_b}' + \Delta v_z \tag{25}$$

$$A_{x_b} = A_{x_b}' + \Delta a_x \tag{26}$$

$$A_{y_b} = A_{y_b}' + \Delta a_y \tag{27}$$

$$A_{z_b} = A_{z_b}' + \Delta a_z \tag{28}$$

where:

V_{x_b}', V_{y_b}', V_{z_b}' = uncorrected body axes airmass velocities

A_{x_b}', A_{y_b}', A_{z_b}' = uncorrected body axes accelerations

AIRCRAFT AXES — IIRS AXES

$$\begin{vmatrix} V_{x_b}', & A_{x_b}' \\ V_{y_b}', & A_{y_b}' \\ V_{z_b}', & A_{z_b}' \end{vmatrix} = \begin{vmatrix} \cos\theta\cos\psi & \cos\theta\sin\psi & -\sin\theta \\ -\cos\phi\sin\psi + \sin\theta\sin\phi\cos\psi & \sin\theta\sin\phi\sin\psi + \cos\phi\cos\psi & \cos\theta\sin\phi \\ \sin\theta\cos\phi\cos\psi + \sin\phi\sin\psi & \sin\theta\cos\phi\sin\psi - \sin\phi\cos\psi & \cos\theta\cos\phi \end{vmatrix} \begin{vmatrix} V_x, & A_x \\ V_y, & A_y \\ V_z, & A_z \end{vmatrix} \tag{22}$$

FIGURE 5

V_{x_b}, V_{y_b}, V_{z_b} = airmass body axes velocities at the c.g. of the aircraft

A_{x_b}, A_{y_b}, A_{z_b} = body axes accelerations at the c.g. of the aircraft

α, β, γ Determination

Angle of attack, α, sideslip angle, β, and flight path angle, γ, are determined directly from the corrected airmass body axes velocities using the equations presented below. Note that none of these angles is dependent on upwash angle determination nor are they necessarily less accurate during highly dynamic flight than they are in stabilized flight, since they are dependent only on the accuracy of the three axes, inertially derived velocity components.

$$\alpha = \tan^{-1} \left(V_{z_b} / V_{x_b} \right) \tag{29}$$

$$\beta = \tan^{-1} \frac{V_{y_b}}{\sqrt{V_{x_b}^2 + V_{z_b}^2}} \tag{30}$$

$$\gamma = \tan^{-1} \frac{-V_z}{\sqrt{V_x^2 + V_y^2}} \tag{31}$$

A schematic of the determination of the above angles is shown in Figure 6.

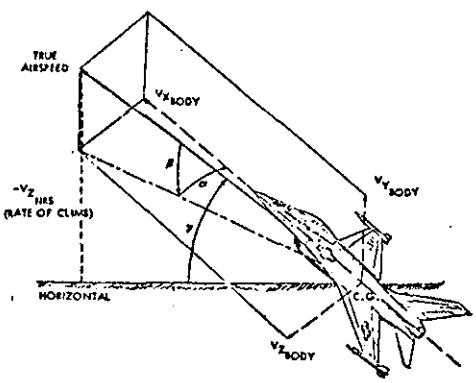

Figure 6. α, β, and γ Determination

Transformation to Wind Axes

Using the angles just derived, the body axes data can now be transformed to wind axes information. From these data, the accelerations along and normal to the instantaneous flight path can be determined using the transform shown in Figure 7.

Calculate Performance Parameters

The following performance parameters can be calculated from the IIRS using the data derived in the previous sub-sections. A chart showing the outputs available is presented in Figure 8.

o Flight Path Angle	o Take-off Distance and Velocity
o Angle of Attack	o Landing Distance and Velocity
o Sideslip Angle	o Runway Slope
o Specific Energy	o C_L *
o Specific Energy Rate	o C_D *
o Rate of Climb	o C_Y *
o Body Axes Accelerations	o C_N *
o Wind Axes Accelerations	o C_A *
o Body Axes Angular Rates and Accelerations	o $C_{Y_{BODY}}$ *
o Wind Axes Angular Rates and Accelerations	o Horizontal, Vertical, and Total Turn Rates

* Gross Weight, Gross Thrust, and Net Thrust Required

Figure 8. IIRS Performance Usage

True Airspeed (V_T)

$$V_T = \sqrt{V_{x_b}^2 + V_{y_b}^2 + V_{z_b}^2} \tag{33}$$

Flight Path Acceleration (a_{FP})

$$a_{F_P} = \frac{A_{x_w}}{g} \tag{34}$$

where g is local gravitational attraction of the Earth at the test altitude.

Rate of Climb ($\dot{h}$)

$$\dot{h} = - V_{Z_I} \tag{35}$$

Specific Energy (E_s)

$$E_s = h + \frac{V_T^2}{2g} \tag{36}$$

Specific Energy Rate (P_s)

$$P_s = a_{F_P} V_T \tag{37}$$

In order to calculate aerodynamic parameters, the gross weight of the aircraft (W_T), gross thrust of the engine (F_g), and engine-related drag terms (F_e) must be calculated. For the YF-16, these are supplied by separate computer programs which are run upstream of the IIRS program using instrumented aircraft parameters. The aerodynamic coefficients derived below can be converted to body axes coefficients for direct comparisons with wind tunnel data using the inverse of the transform shown in Figure 7.

Drag Coefficient (C_D)

$$C_D = \frac{1}{qS} \left(F_g \cos \alpha - F_e - a_{FP} W_T \right) \tag{38}$$

where q is dynamic pressure and S is reference wing area.

$$\begin{array}{c} \text{WIND AXES} \\ \begin{vmatrix} A_{x_w} \\ A_{y_w} \\ A_{z_w} \end{vmatrix} \end{array} = \begin{vmatrix} \cos\alpha\cos\beta & \sin\beta & \sin\alpha\cos\beta \\ -\cos\alpha\sin\beta & \cos\beta & -\sin\alpha\sin\beta \\ \sin\alpha & 0 & \cos\alpha \end{vmatrix} \begin{array}{c} \text{BODY AXES} \\ \begin{vmatrix} A_{x_b} \\ A_{y_b} \\ A_{z_b} \end{vmatrix} \end{array} \tag{32}$$

FIGURE 7. WIND AXES TRANSFORMATION

Lift Coefficient (C_L)

$$C_L = \frac{1}{qS} (A_{z_w} W_T/g - Fg \sin \alpha) \quad (39)$$

Takeoff and landing distances are calculated using IIRS inertial velocities and altitude. The horizontal velocities are vectorally added together and intergrated with respect to time to obtain distance traveled from brake release or until the aircraft is stopped. Since the IIRS can build up slight velocity errors over a period of time, the velocities measured when the aircraft is stopped are subtracted out of the data throughout the run before velocity intergration. Acceleration, rate of climb, α, and β are determined exactly as they are in the equations presented above.

V. Flight Test Results

The YF-16 eleven month flight test program has been very successful. A large measure of this success can be attributed to the IIRS and its ability to supply all necessary performance data in a minimum of flight test time. The author feels that no other instrumentation system available could have produced a comparable quantity and quality of data in such a short time span with as high a day-to-day reliability. The following subsections discus in detail various aspects of the IIRS flight test methods and results and the advantages and problems experienced with the instrument during the course of the program.

Test Methods and Results

The test methods used on the YF-16 program were developed to make maximum use of flight time since the test program only encompasses eleven months and all aircraft performance data, as well as many other YF-16 characteristics, had to be evaluated in that time. The philosophy adopted was to combine testing, on the same flight, required by the various disciplines and eliminate reliance on ground based data gathering instrumentation whenever possible. The IIRS lended itself well to this concept. The following paragraphs address each phase of the YF-16 performance analysis and how the IIRS was used to obtain data.

The primary performance task was to evaluate the capability of the YF-16 to climb, turn, and accelerate in intermediate power and maximum afterburner. These data were used to determine the YF-16 combat potential and were called energy-maneuverability (EM) tests. Since the YF-16 is an ultra-performance combat vehicle, all these tests involved highly dynamic maneuvers. The ability of the IIRS to accurately determine performance under these conditions was proved out in the flight test program and, indeed, was the primary reason it was selected for use on the YF-16 program. A representative EM plot is shown in Figure 9.

During these EM tests, accurate wind information was needed to convert inertially sensed ground speed to airspeed information as explained in section IV. This requirement meant that a quasi-stabilized wind calibration had to be done before most dynamic maneuvers in order to accurately assess local wind speed and direction from a comparison of IIRS inertial velocity and pitot-static airspeed. This "wind cal" required that the pilot

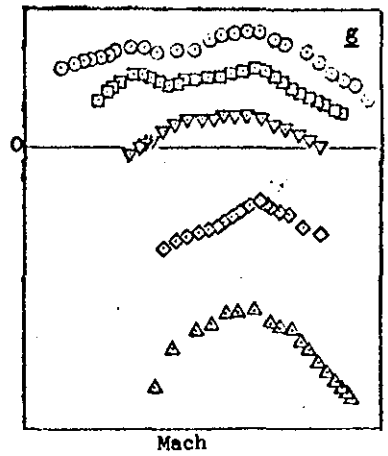

Figure 9. Maneuver Performance

hold a wings-level, low rate of climb point for approximately ten seconds, which was done while the pilot was setting up on initial test Mach and altitude.

Take-off and landing data were evaluated with several aircraft configurations during the course of the program. Initially, data reduction was done using the conventional phototheodolite ground camera method. Parallel data analysis was also made using IIRS outputs. Comparisons between the two techniques showed no appreciable differences in velocities or distances measured. Thereafter, almost all of the takeoffs and landings were reduced using IIRS data and phototheodolite support was no longer necessary. A typical take-off plot comparing IIRS and phototheodolite data is presented in Figure 10.

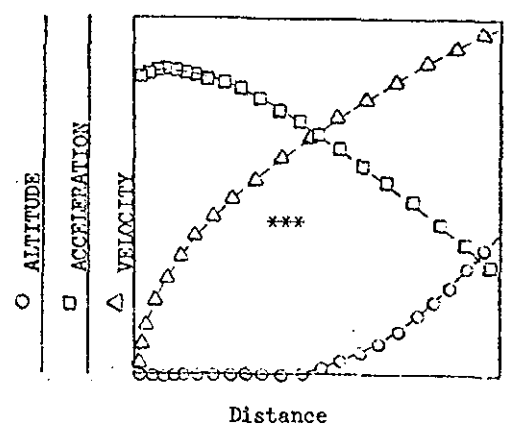

Figure 10. Take-Off Data
*** Lines are photo. data, symbols are nav. data

Climbs and descents were evaluated using fixed power setting runs following a constant Mach and/or constant calibrated airspeed path. Rate-of-climb, pitch angle, flight path acceleration, etc., data were obtained from the IIRS. The data were all correlatable flight to flight and initial radar tracking confirmed IIRS instantaneous rates of climb measured. Unlike some other possible sources of data, there was no tendency for the sensed climb rate to toggle, wander, or lag. A typical rate-of-climb plot is shown in Figure 11.

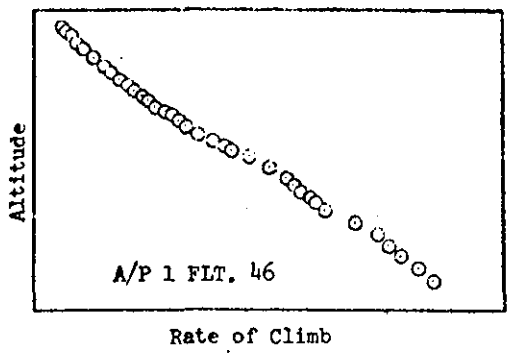

Figure 11. Climb Performance

Cruise data were evaluated using the classic speed-power approach, i.e., stabilizing on a Mach and altitude condition for one to three minutes. The IIRS was used to sense flight path acceleration.

Store drags were determined using a variety of techniques including stabilized flight range evaluation, incremental longitudinal acceleration sensed after store separation, and fixed power wind-up turns. All of these data were obtained by "piggy-backing" off other types of testing. For instance, the variation in store drag as a function of lift coefficient was determined by obtaining data during stability and control wind-up turns.

Air data system position error calibration was obtained using radar tracking, pacer aircraft, and tower fly-bys. However, it was found that good position error data through the Mach jump region could be obtained during level flight accelerations and decelerations by comparing IIRS inertial altitude with pitot-static pressure altitude as a function of time. This is again an instance of the IIRS allowing a single test run to serve several purposes simultaneously and requiring less ground support equipment. Mach jump position error data as determined by radar tracking and IIRS outputs are shown in Figure 12.

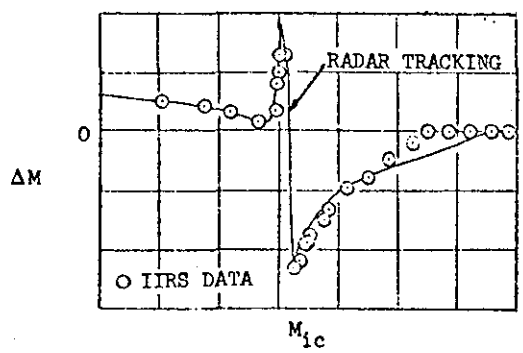

Figure 12. Position Error Data

Angle of attack and sideslip calibration was done during speed-power points, level flight accelerations, and wind-up turns using the IIRS α and β as the references. This allowed the static and dynamic characteristics of the aircraft α and β probes to be established throughout the YF-16 maneuvering envelope. Flight test experience has shown that the IIRS supplies accurate data well above 40° α in very dynamic maneuvers. Since it does not rely on dynamic pressure to drive it, the IIRS can supply good α and β calibration results even at low airspeeds. Typical calibration curves are presented in Figures 13 and 14.

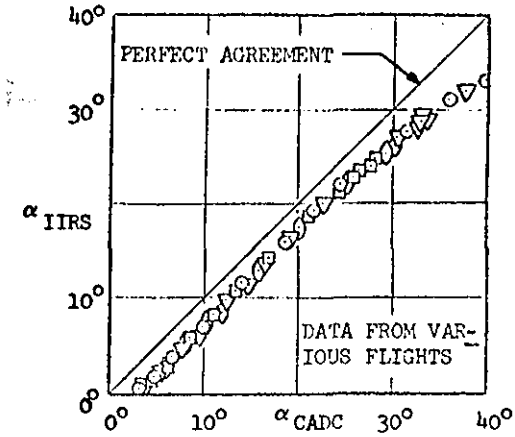

Figure 13. α Calibration

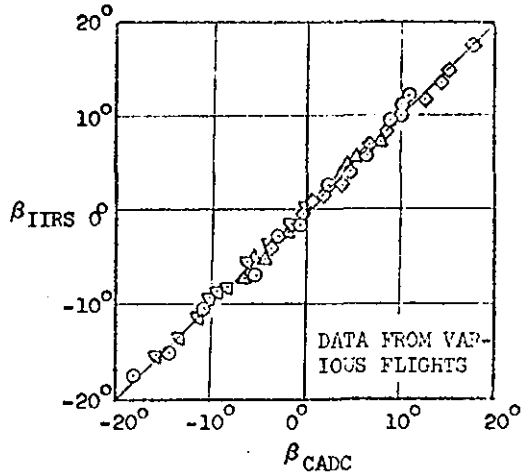

Figure 14. β Calibration

Aerodynamic lift and drag data were also evaluated in conjunction with other testing. No specific purpose evaluation maneuvers, such as roller coasters, were found to be necessary. Most data were obtained during fixed power EM testing, stability and control wind-up turns, climbs, and take-offs and landings. Lift versus angle of attack data at a typical flight condition is presented in Figure 15. Figure 16 illustrates the quality of drag polar data obtainable.

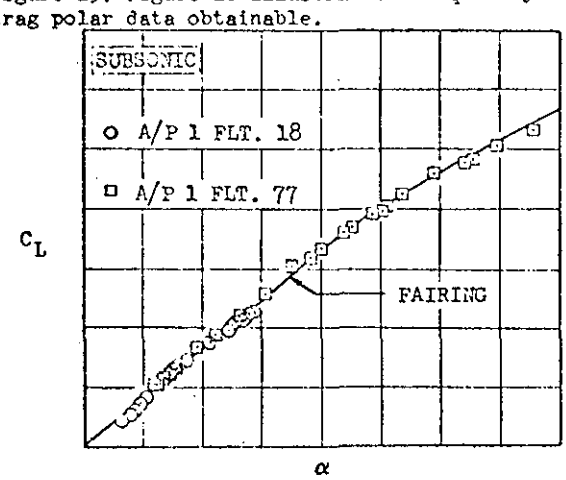

Figure 15. Lift vs α

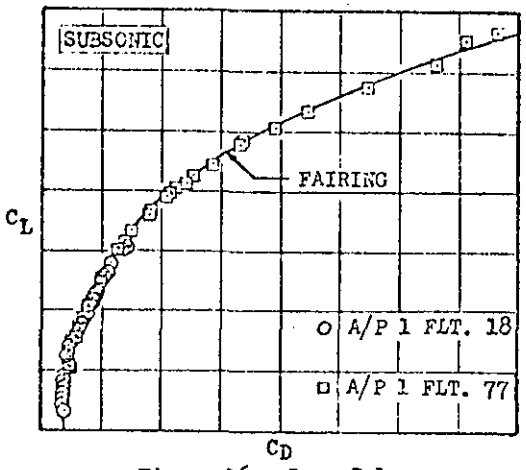

Figure 16. Drag Polar

IIRS Flight Test Experience

The IIRS lends itself well to real-time ground monitoring and to quick-turnaround post-flight data reduction as well as to highly automated conventional post-flight data reduction and standardization due to the fact that it outputs nearly all data needed for performance work in a convenient serial-digital work format at five times per second. With the aid of a small ground-based on-line computer, IIRS telemetered outputs could be used to display to the engineer realtime altitude, instantaneous rate of climb, flight path acceleration, specific energy and energy rate, turn rate, normal acceleration, and range traveled along the flight path. These data were very useful in determining quickly whether a data run was satisfactory or needed to be repeated.

Quick turn-around data processing of all the parameters developed in section IV was done using a Hewlett Packard 9820A desk top computer with a paper tape reader, two cassette drives, and an X-Y plotter. The IIRS data was fed in via paper tape and finalized test day performance and aerodynamic data were automatically plotted out a short time later. Total quick-look turn around time to obtain these data was as little as four hours after flight

IIRS reliability and usability throughout the course of the flight test program have been exceptional. The system averaged 18.4 flight hours between IIRS unscheduled maintanance actions and approximately 35 flights between removals of the instrument for repairs or recalibrations. No flight has ever had to be aborted due to IIRS failure and less than 1% of all the performance data gathered on the program was lost due to IIRS degradation or failure. The IIRS was active on all but four of over 300 flights.

The few problems encountered with the IIRS have been mainly mechanization and programming changes which were easy to identify and correct. Most of these occurred during the initial shake-down phase of the flight test program and thus did not affect performance data gathering.

Data reduction problems related to IIRS use have been encountered during the program. The first of these was erratic calculation of angular rates in the data reduction program and was caused by a data smoothing problem under certain high rate conditions. More careful choice of sample times and scrutiny of the program outputs reduced this problem to an occasional nuisance.

Another problem was wind fluctuation during the course of a run. This normally took the form of a wind shear front and could be easily recognized by analyzing the computer output plots. A typical wind shear is shown in Figure 17.

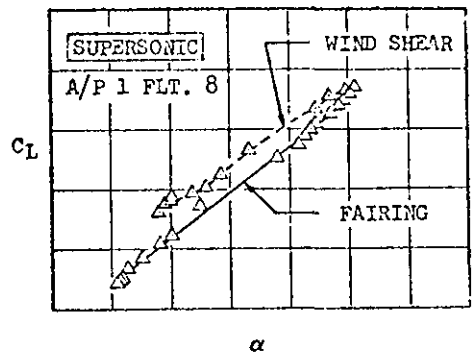

Figure 17. Wind Shear

The data recovered after the shear was encountered were generally not usable unless the new wind velocity and direction could be determined by doing a "wind cal" after the maneuver. Wind shear conditions were mostly encountered while flying over the mountains surrounding Edwards and invalidated approximately two or three percent of the total IIRS data obtained during the course of the program

VI. Future Use

The IIRS system of instrumentation has a lot of potential for further development and flight test use. Experience with the YF-16 program has provided many guidelines for future use, especially in the areas of changes and refinements to the present system. Specific modifications that are planned for the Delco Carousel V IIRS include the incorporation of an onboard capability to decouple the baroinertial altitude loop for take-off and landing and for certain high rate of climb tests. This will allow more accurate measurement of inertial short-term changes in altitude. Another change will be the expansion of the onboard wind calculation function to allow accurate determination regardless of aircraft roll angle or rate of climb.

Any future IIRS-type system should be selected with the following criteria in mind.

- Accuracy - The accuracy of any current gimbaled navigation platform should be sufficient for performance work. However, in many of these systems, the internal determination of acceleration is not available for output without an extensive rework of the platform electronics. This type of rework is costly and can have an adverse effect on overall performance and reliability.

- Reliability - Since flight test time is very expensive, demonstrated reliability should be heavily weighed in evaluating an IIRS candidate. A high mean time between failures and an extensive self-test capability are very desirable features.

- Data Output Rate - An output rate of five times per second is adequate for almost any type of performance work. However, if stability and control or handling qualities work is planned using the IIRS, an output rate of 30 to 50 times per second is advisable.

- Independance - The IIRS must be able to function from take-off to landing on each flight with no Doppler, TACAN, Omega, or other type of in-flight up-date which can produce discontinuities in the IIRS output data.

- Data Sychronization - The IIRS contractor must be able to supply a time line analysis of all output parameters so that the time relationships between outputs can be determined. A good deal of data reduction complexity can be eliminated if internal IIRS data synchronization can be mechanized.

- Computer Mechanization - A general purpose digital computer incorporated into the IIRS is highly desirable. It allows outputs in a digital format which are more easily interfaced with ground-based data reduction equipment. Also, reprogramming and expansion of internal computing capabilities, if needed, is facilitated.

- Shock Mounting - Most platforms have shock mounts installed in them to attenuate high frequency vibration. The characteristics and play in these mounts should be investigated to determine at what frequency they begin to smooth out sensed accelerations and what, if any, error they produce in body axes angular position during dynamic flight conditions.

- Location - The location of the IIRS unit within the aircraft should be given careful consideration since it, more than any other single factor, dictates the complexity of the data reduction procedures. The IIRS should be placed at or near the aircraft nominal c.g. on a rigid structural support.

- Alignment - Alignment of the IIRS baseplate with respect to the aircraft body axes is critical. An angular alignment of no more than three minutes of arc in each axis should be specified. The IIRS installation should be designed so that the platform can be removed and replaced without the need for a new boresight alignment.

- Cost - The initial cost of an IIRS system is high relative to other types of performance instrumentation. However, over the course of a flight test program, the total cost of an IIRS could be much lower when such factors as reliability, data reduction time, engineering support, maintenance, ground instrumentation required, and flight test time are taken into consideration. In addition, lease arrangements, rather than outright purchase, may be arranged with some inertial platform manufacturers.

VII. Summary

The IIRS concept has made significant contributions to the YF-16 flight test program and has a tremendous potential for future application, particularly when accurate data in a dynamic flight environment is desired. To make the most of this potential, care should be taken in the selection of the platform and computer, the location of the IIRS in the aircraft, the interfacing between it and other onboard and ground equipment, and the structuring of the data reduction procedures needed to analyse the IIRS outputs and convert them to good performance data.

The information from this type of flight test instrumentation far exceed the capabilities of past performance data sources and the trend toward more efficient use of flight test time indicates that this concept will find many applications in the future. If the engineer has a solid understanding of the capabilities and limitations of the IIRS and takes a good deal of care in its implementation for a particular flight test application, the IIRS concept can be a significant advance in the state of the art of performance flight testing.